SPACE 1600 HYBRID - Product Dimensions

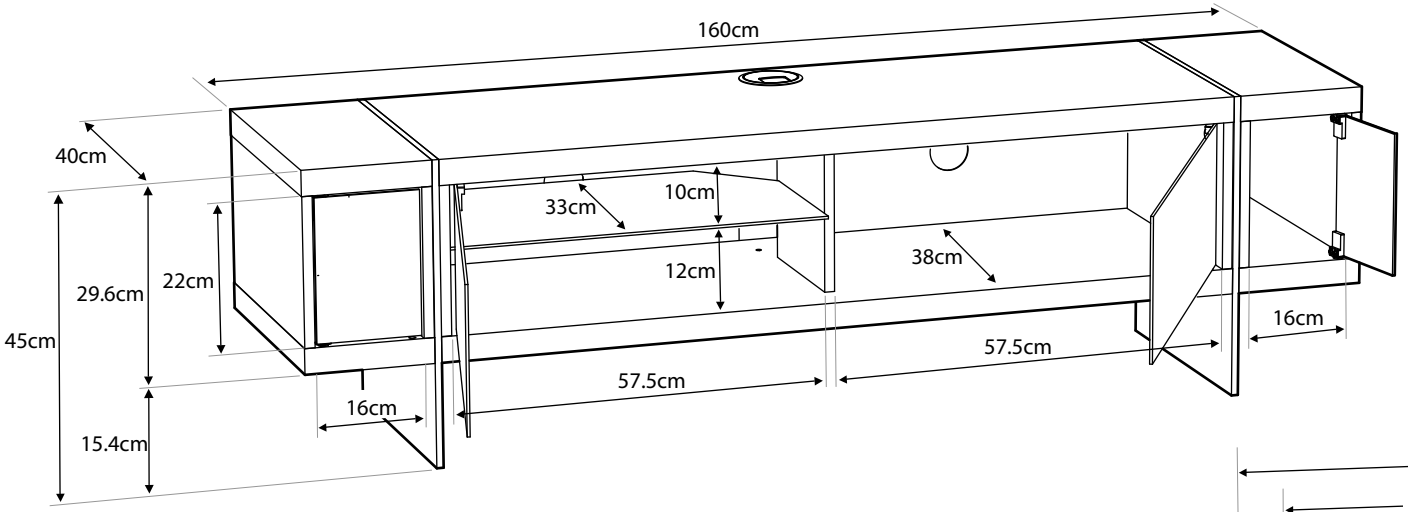

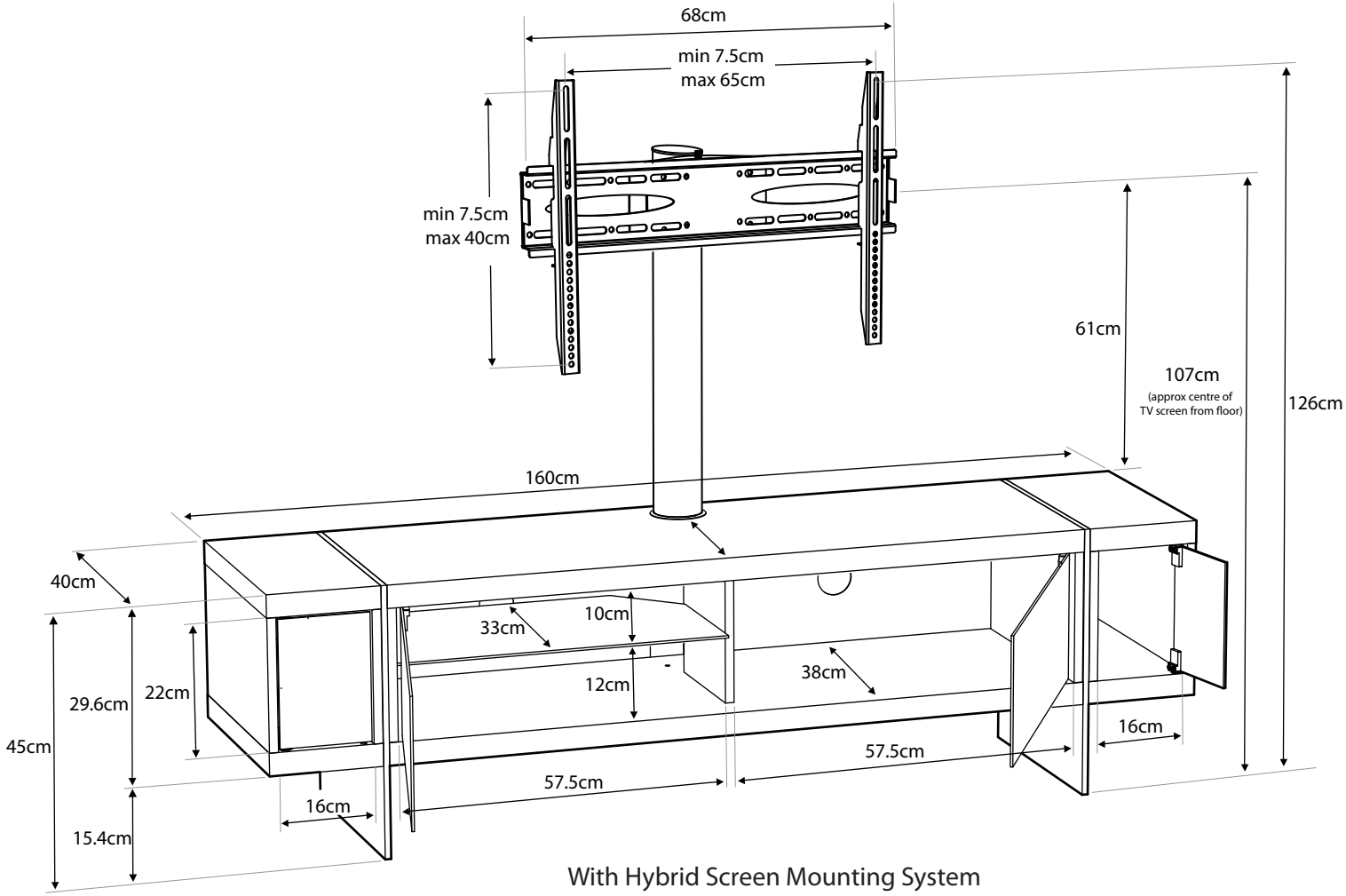

With Hybrid Screen Mounting System

MDA DESIGNS
BRINGING DESIGN TO LIFE